ON A WING AND A PRAYER

Group 4: Kira Schweikert, Jay Camp, Jacob Henderson, Alessandra Ozuna, Aeryn Paet

PROBLEM/OBJECTIVE

Problem & Objective

- Aircraft wings bend due to aerodynamic lift during flight
- Excessive wing deflection can cause structural failure or instability
- Engineers must predict wing deformation early in the design process
- This project models the wing deflection under aerodynamic lift
- The program estimates **wing deflection** based on **flight conditions** and **material properties**

Goal:

Develop a **simplified computational model** to **estimate aircraft wing bending** and understand how aerodynamic forces affect structural deformation.

AIRCRAFT AND MATERIALS

Aircraft options:

- Sailplane
- Cesna 172
- Gulfstream G500
- Boeing 737-800
- Boeing 787-10
- Lockheed C-5 Galaxy

Material options:

- Carbon Fiber (CFRP)
- Aluminum (7075)
- Titanium Alloy
- Sitka Spruce (wood)
- Concrete

Different aircraft sizes and material stiffness affect how much the wing bends during flight.

EQUATIONS USED

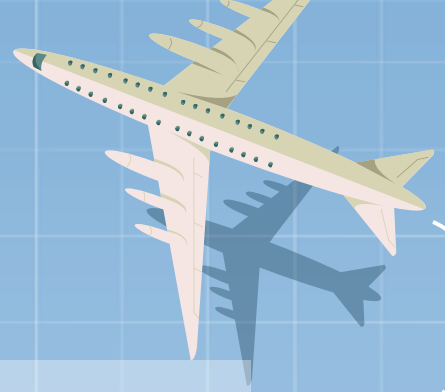

Air Density

$$\rho = \rho_0 \left(1 - \frac{Lh}{T_0}\right)^{\frac{g}{RL}-1}$$

Lift Equation

$$lift = 0.5(\rho v^2) * area * cl$$

Average Wing Chord

area divided by the span

Wing Thickness Approximation

Ratio of thickness to chord

Second Moment of Area

Cross-sectional resistance to bending

Distributed Lift Load

$$q = \left(\frac{\frac{lift}{2}}{\frac{span}{2}}\right)$$

EQUATIONS USED

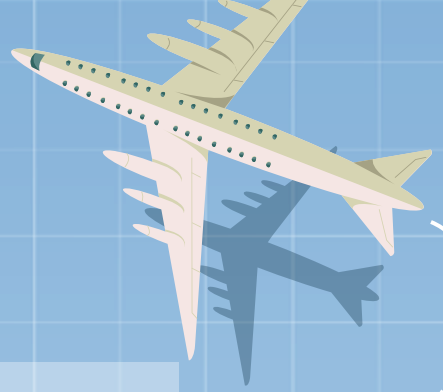

Cantilever Beam Deflection

$$\frac{(q * l^4)}{(8 * E * I)}$$

Structural Safety Check

Deflection > 0.2 * L/2

Airspeed Conversion

$$v = air_{spd} * 0.51444$$

HOW THE PROGRAM WORKS

Inputs:

There are 4 total inputs:

1. The user is asked to choose from a list of 6 aircraft.
2. The user is given a choice of 5 materials for the aircraft's wings.
3. The user provides the airspeed (in knots) of the aircraft. (>500)
4. The user enters the flying altitude (in meters) for the aircraft (>13000)

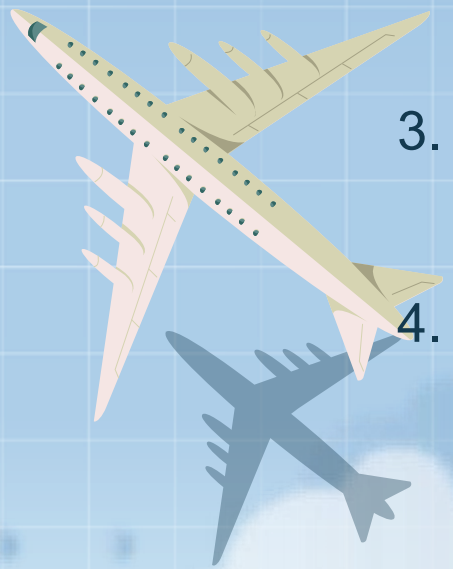

Process:

The program uses the equations from before along with a pre-defined library for each plane type including the area, volume, and length of the wings to calculate the deflection of the wing.

Output:

The program uses matplot to show what the deflection would look like from a forward view. It also repeats to the user their selections as well as tells them the total lift and estimated max deflection at the wingtip.

RESULTS OF CODE

Example Output:

AIRCRAFT: Gulfstream G500
MATERIAL: Carbon Fiber (CFRP)
TOTAL LIFT: 2,115,895.025 N
Estimated Wingtip Deflection: 11.712 cm

Visualization:

The code tells you the total lift generated and the maximum estimated deflection at the wingtip. Along with that it provides you with a diagram of the deflection along the wing. For reference 11.7 cm is about half the length of a ruler, and 2 million Newtons is equivalent to the force generated by the weight of a large freight train.

Safety Check:

The code checks the inputs against specified minimums and maximums for altitude and velocity, which are:
50kts<Velocity<500kts
0m<Altitude<13000m

PLOTTING THINGS

Purpose of Plotting

- Visualize the deflection of the wing.
- Shows how the wing bends under load
- Generates a deflection path graph

How program plots

X-axis: Uses the aircraft selection and pre-inputted span of a wing.

Y-axis: Uses the equation for wing deflection. Inputting variables from user defined functions (in library) and user inputs.

Using **"for" loop**, the graph plots the deflection as it goes along the length of the wing (over the course of 100 steps to ensure the deflection is accurate).

Result

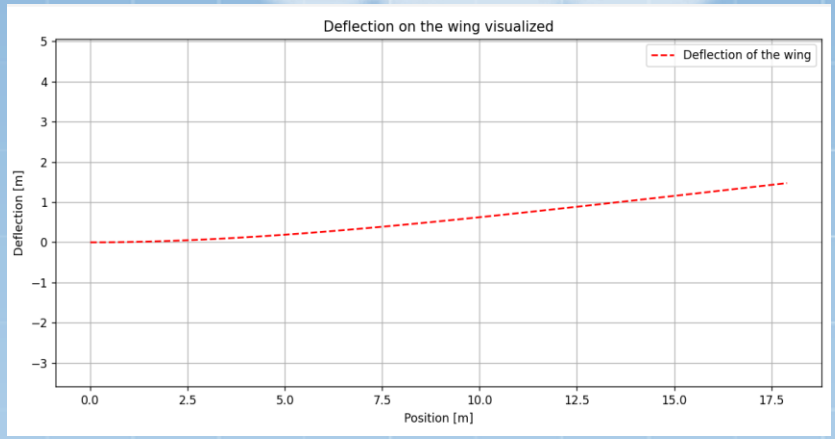

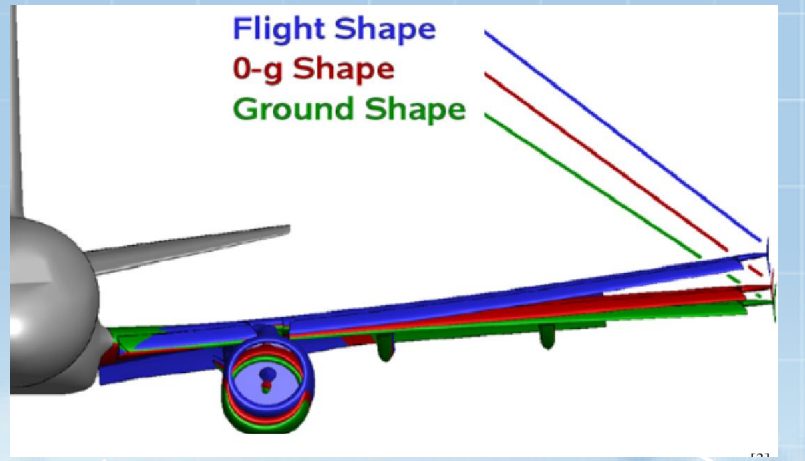

THANK YOU!